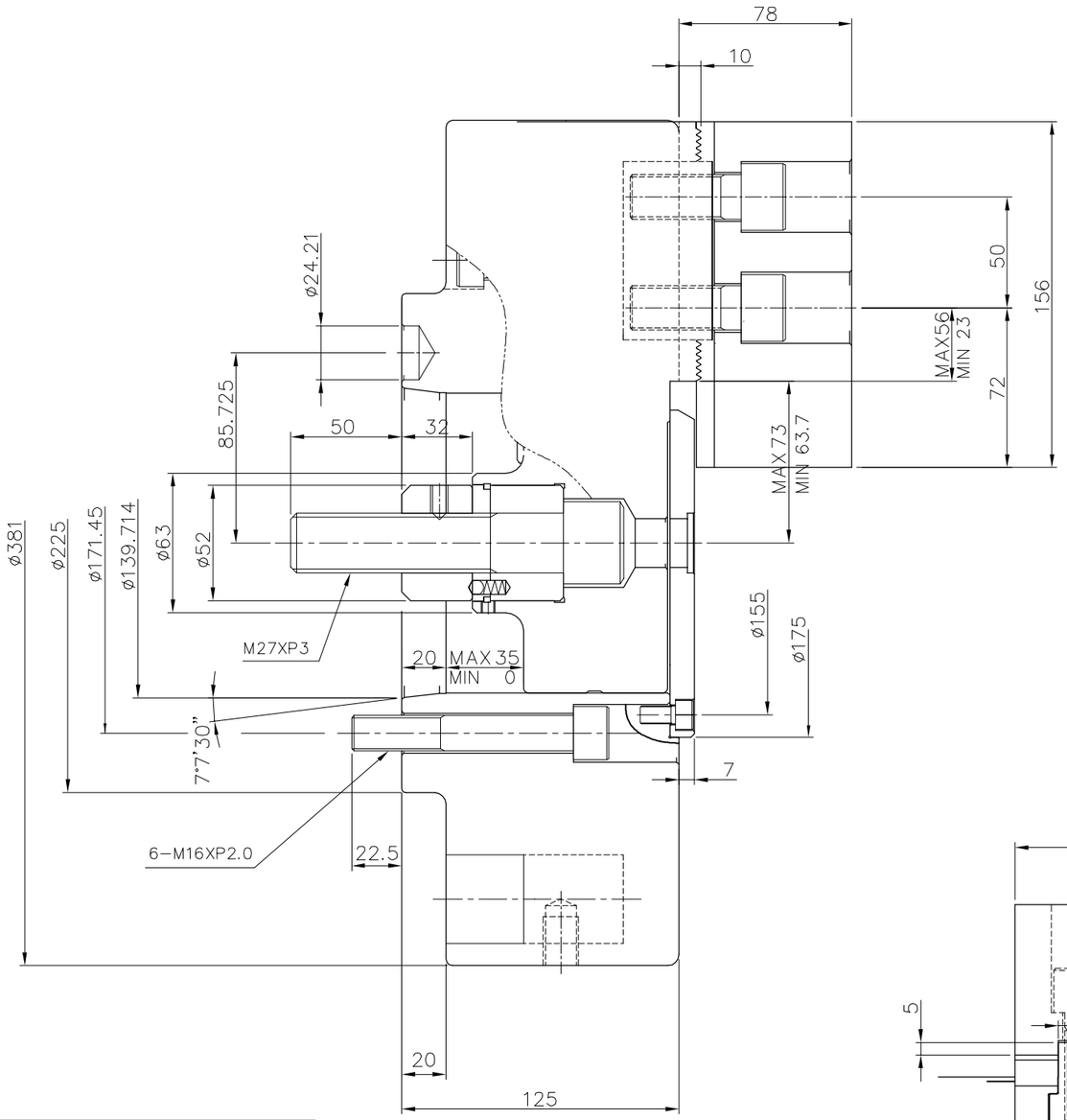

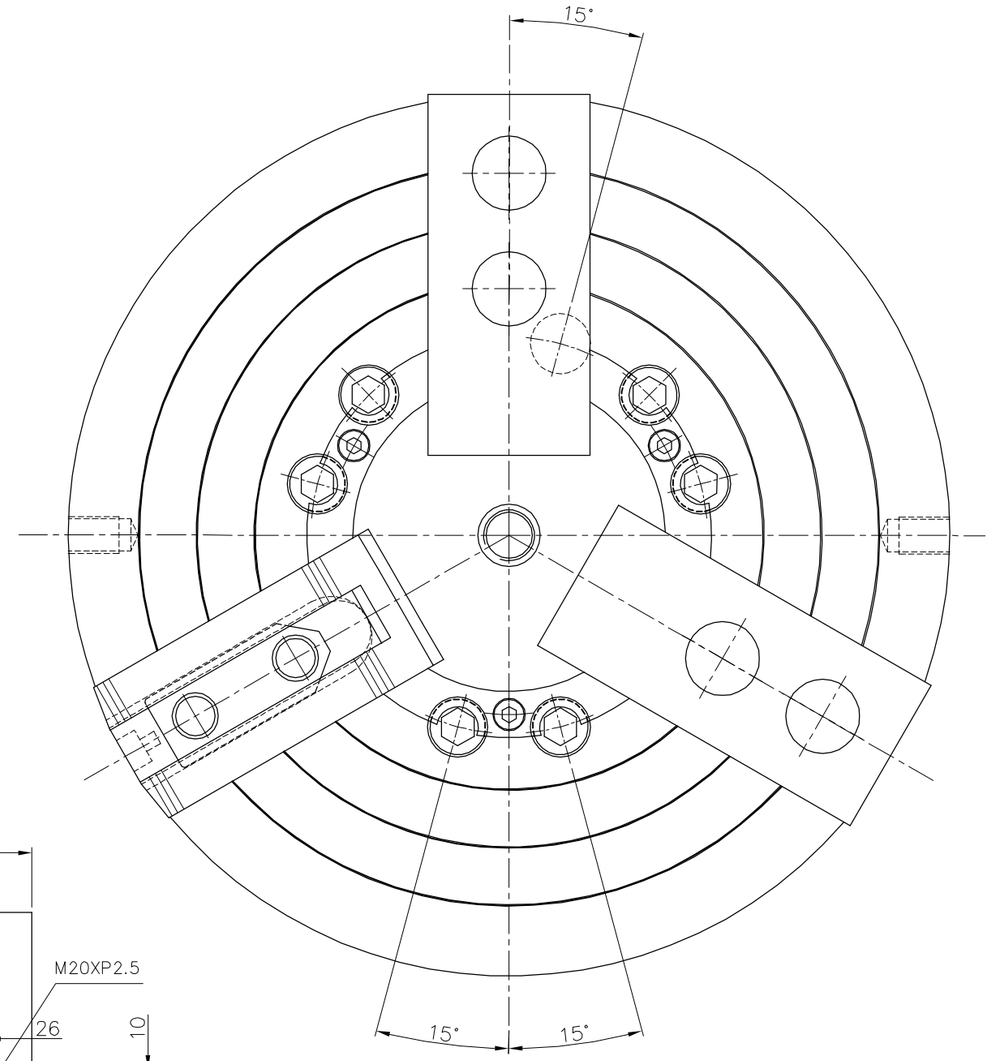

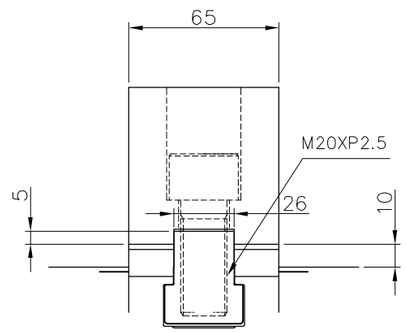

SPECIFICATIONS		
CHUCK TYPE	CAS-15A8	
CYLINDER TYPE	YAS-200	
PISTON STROKE	35 mm	
JAW STROKE (DIA.)	MAX	18.6 mm
MAX. OPERATING PRESSURE (YAS-200)	MAX	26.1 kg/cm ^{2}
MAXIMUM DRAW BAR PULL	7500 kgf	
CLAMPING FORCE	15000 kgf	
MAX. R.P.M	2100 r.p.m	
WEIGHT	93 kg	
GD ^{2}	7.12 kg-m ^{2}	

SCALE	PROJECTION	ITEM NO.	CAS-15A8
1:1		PART NAME	CLOSED CENTER CHUCK ASS'Y
SEOAM 서암기계공업주식회사 SEOAM MACHINERY INDUSTRY CO.,LTD.		PART NO.	1AS15A8