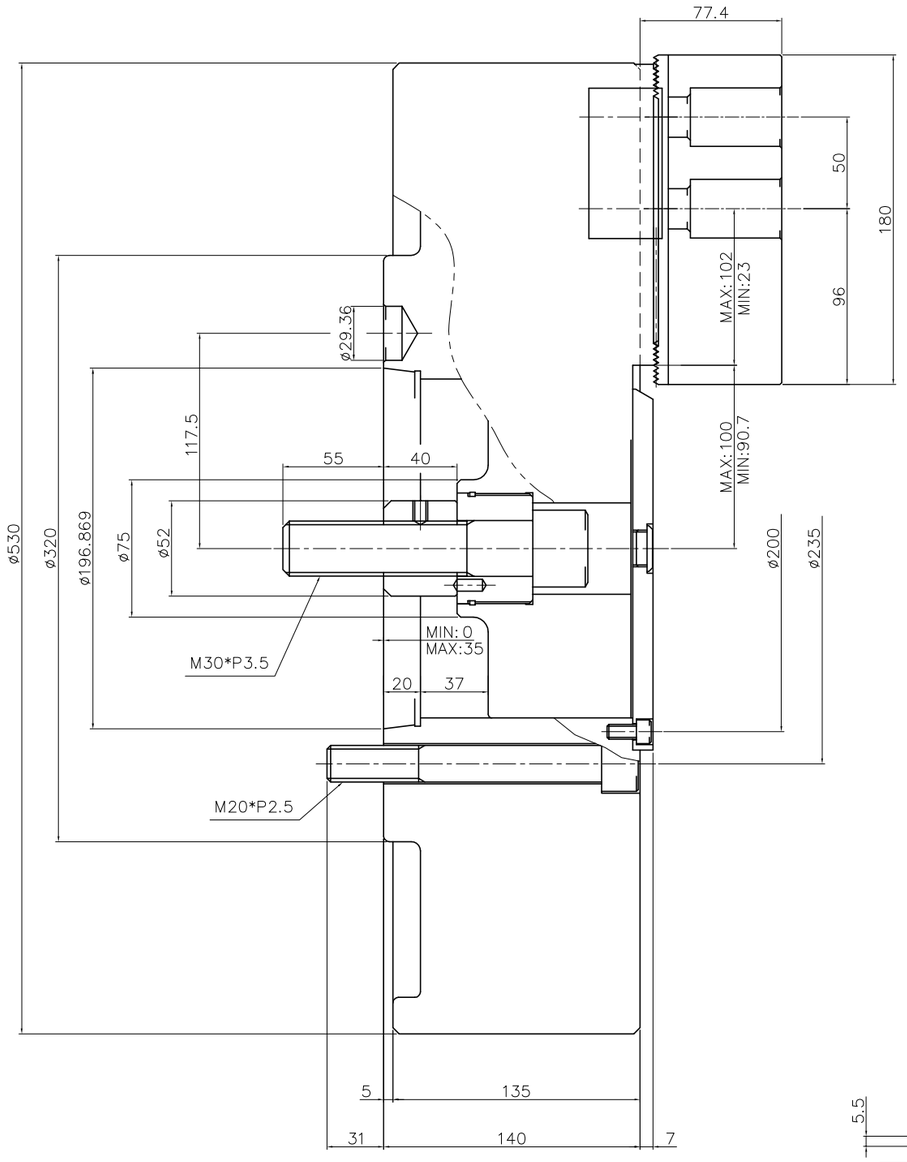

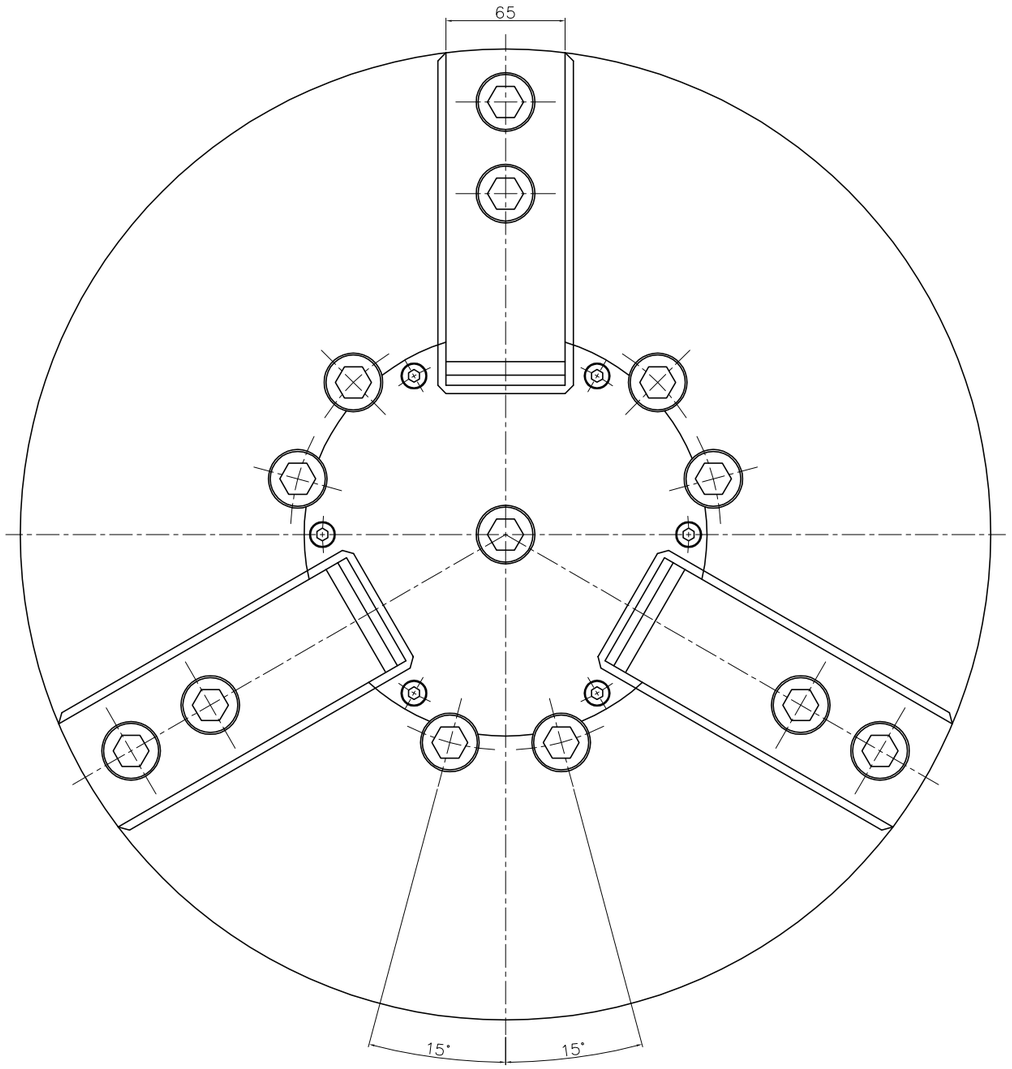

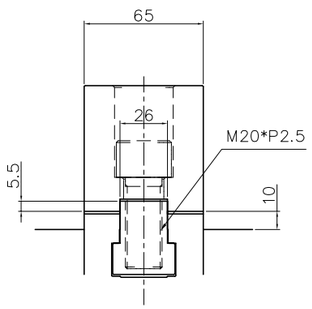

SPECIFICATIONS		
CHUCK TYPE	CAS-21A11	
CYLINDER TYPE	YAS-200	
PISTON STROKE	35 mm	
JAW STROKE (DIA.)	MAX	18.6 mm
MAX. OPERATING PRESSURE (YAS-200)	MAX	35 kg/cm²
MAXIMUM DRAW BAR PULL	10,003kgf	
CLAMPING FORCE	19,800 kgf	
MAX. R.P.M	1500 r.p.m	
WEIGHT	195 kg	
GD²	6.85 kg-m²	

SCALE	PROJECTION	ITEM NO.	CAS-21A11
1:1		PART NAME	CLOSED CENTER CHUCK ASS'Y
SEOAM 서암기계공업주식회사 SEOAM MACHINERY INDUSTRY CO.,LTD.		PART NO.	1AS21A11