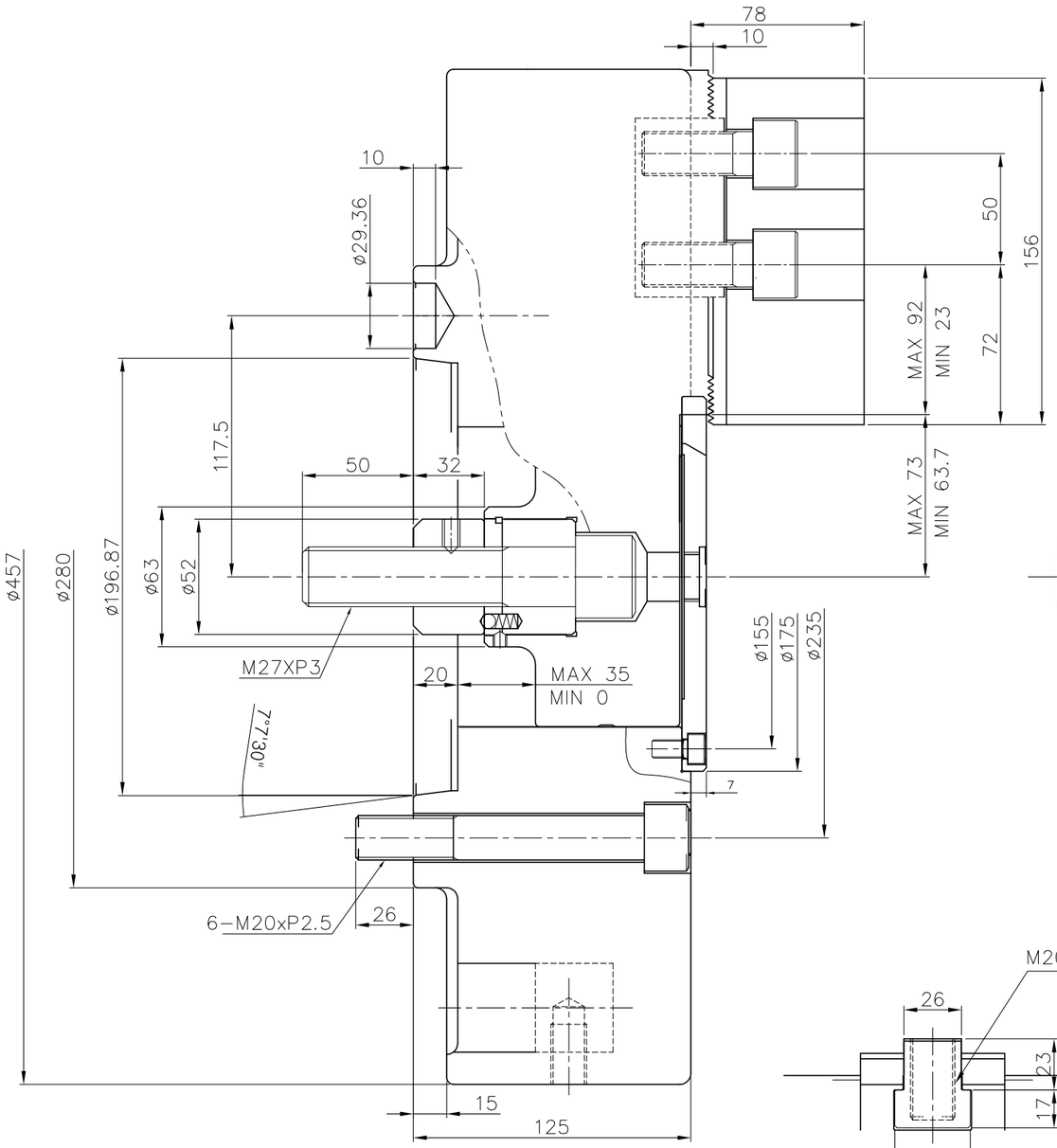

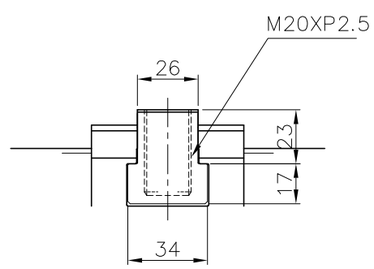

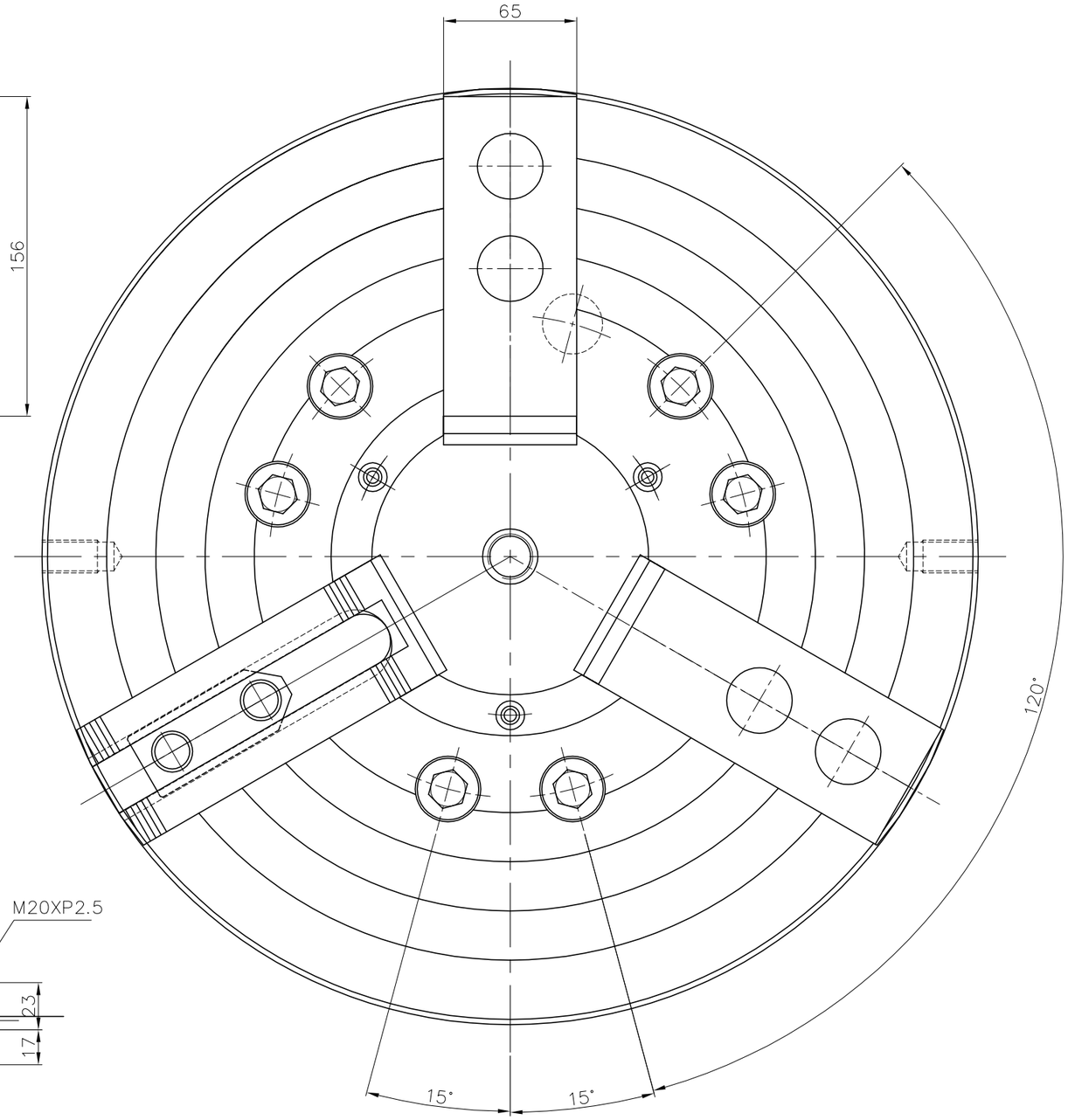

SPECIFICATIONS		
CHUCK TYPE	CAS-18A11	
CYLINDER TYPE	YAS-200	
PISTON STROKE	35 mm	
JAW STROKE (DIA.)	MAX	18.6 mm
MAX. OPERATING PRESSURE (YAS-200)	MAX	26.1 kg/cm²
MAXIMUM DRAW BAR PULL	7500 kgf	
CLAMPING FORCE	15000 kgf	
MAX. R.P.M	1700 r.p.m	
WEIGHT	132 kg	
GD²	13.8 kg-m²	

SCALE	PROJECTION	ITEM NO.	CAS-18A11
1:1		PART NAME	CLOSED CENTER CHUCK ASS'Y
SEOAM 서암기계공업주식회사 SEOAM MACHINERY INDUSTRY CO.,LTD.		PART NO.	1AS18A11