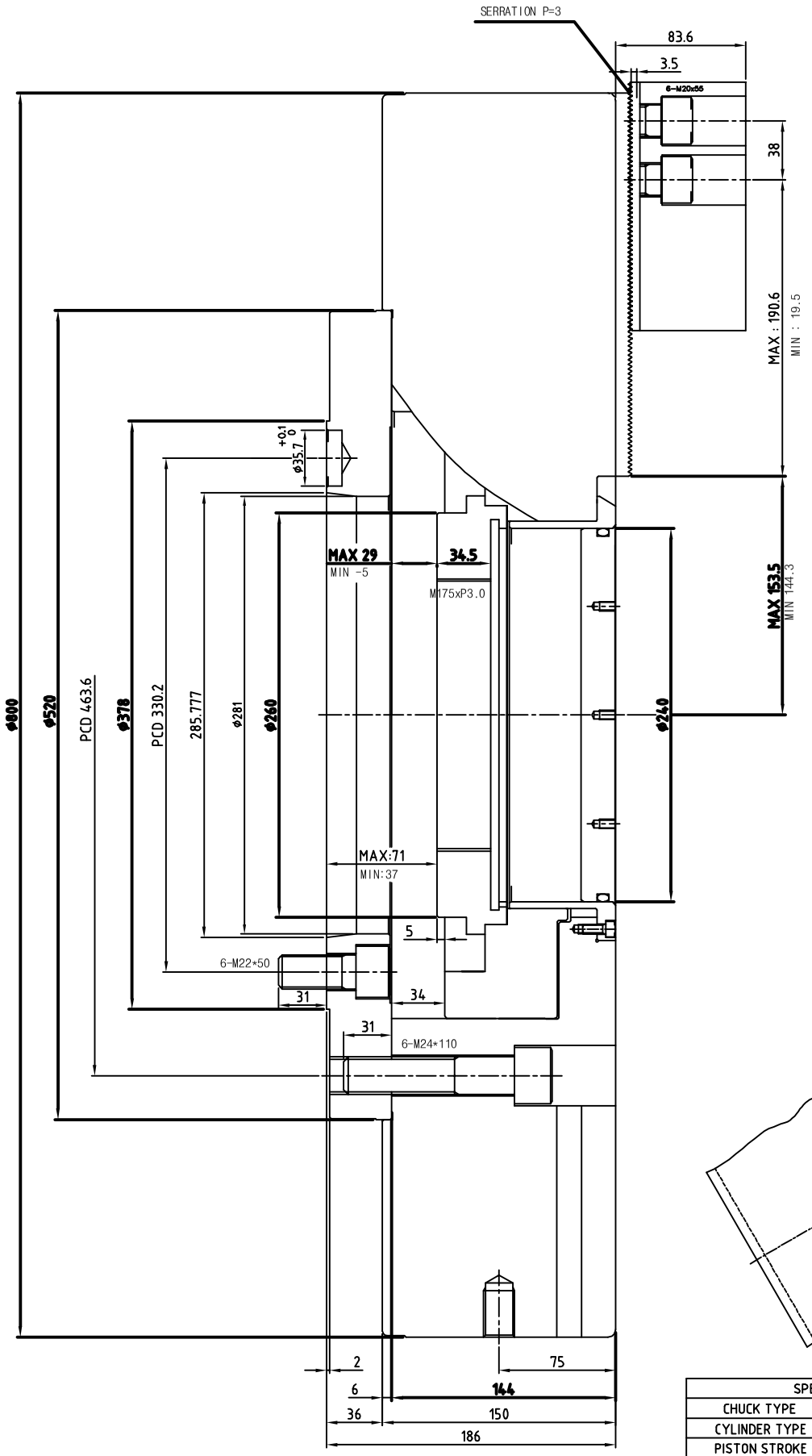

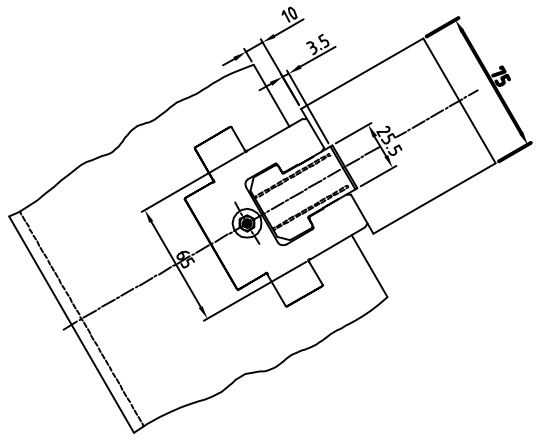

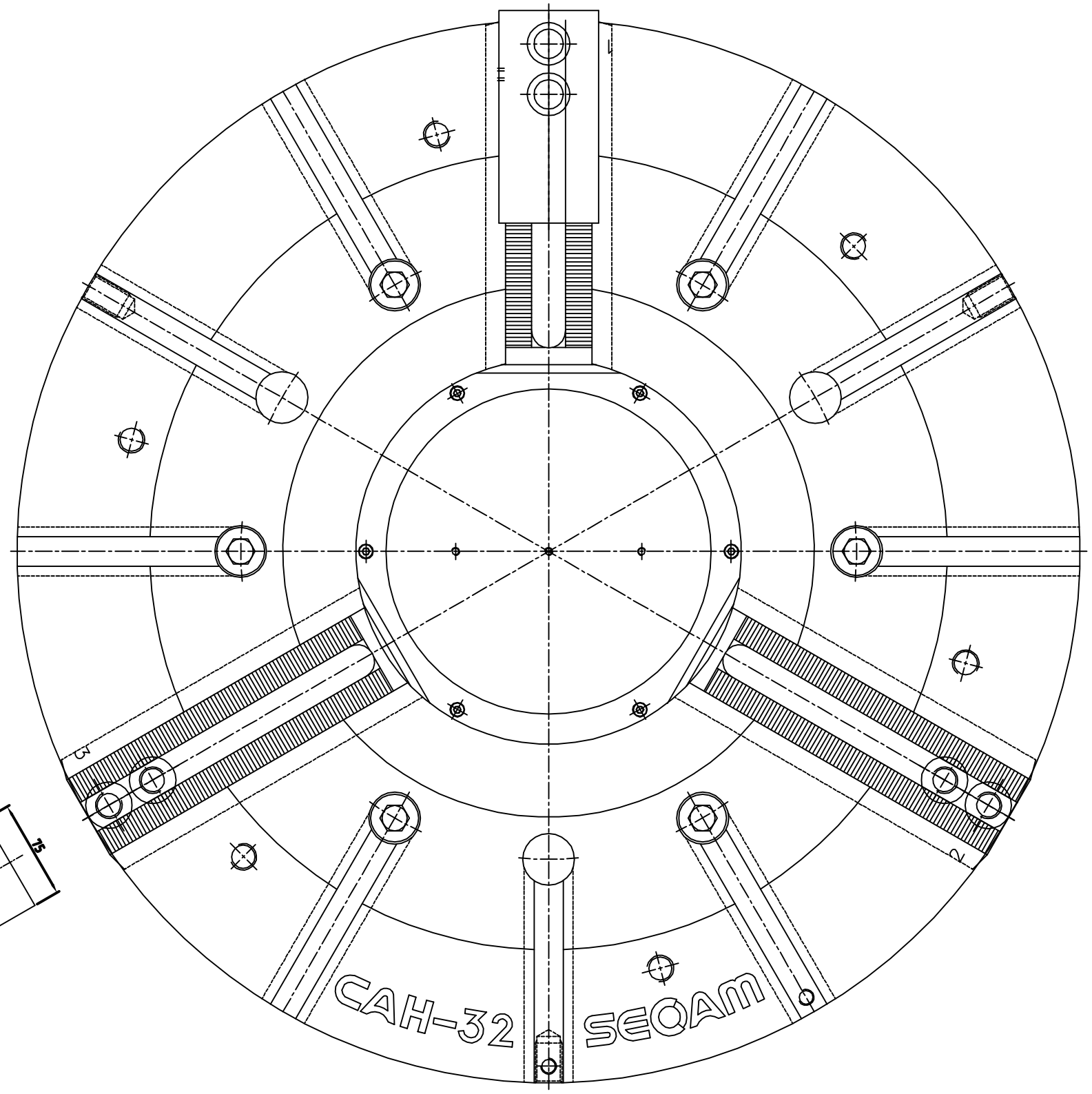

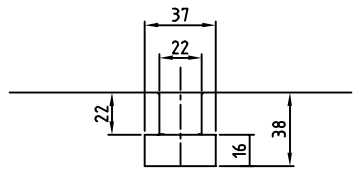

SPECIFICATIONS			
CHUCK TYPE	CAHA-32		
CYLINDER TYPE	YSHL-21		
PISTON STROKE	34	mm	
JAW STROKE (DIA.)	MAX.	18	mm
MAX. OPERATING PRESSURE	MAX.	33.6	Kgf/cm²
MAX. DRAW BAR PULL	10,193	Kg.f	
CLAMPING FORCE (실린더력 5,300일때)	24,464	Kg.f	
MAX. R.P.M	1,200	r.p.m.	
WEIGHT	530	Kg	
GD²	61	Kg.m²	

SCALE	PROJECTION	ITEM NO.	CAHA-32
1:1		PART NAME	OPEN CENTER POWER CHCUK ASS'Y
SEQAM 서암기계공업주식회사 SEQAM MACHINERY INDUSTRY CO.,LTD.		PART NO.	1AHA32